| PAGE | 376 |
|---|---|

| BY | CHK | REVISION RECORD MODIFICATIONS | DATE | REV. |
|---|---|---|---|---|
| ALLEN | | RELEASE TO PRODUCTION | 2007,9,12 | 1.0 |

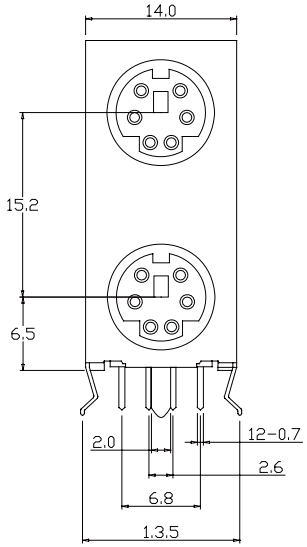


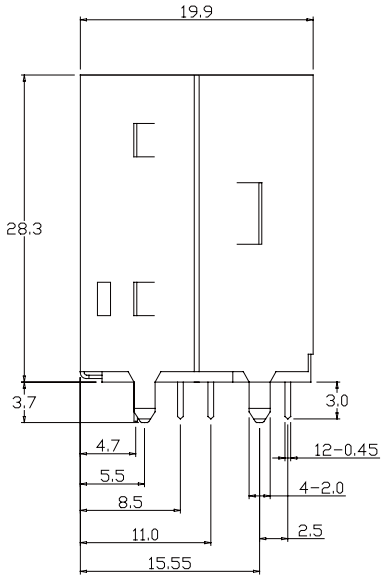


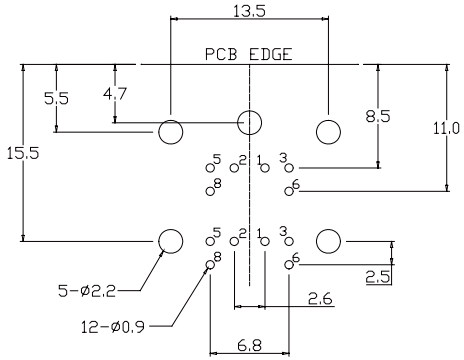


PCB LAYOUT
(BOTTOM VIEW)

| No. | NAME | MATERIAL | FINISH | REMARK | Q'TY |
|---|---|---|---|---|---|
| 1 | TOP HOUSING | P.B.T. | GREEN,3395C | | 1 |
| 2 | BOTTOM HOUSING | P.B.T. | PURPLE,2715C | | 1 |
| 3 | BACK COVER | P.B.T. | PURPLE,2715C | | 1 |
| 4 | CONTACT TERM. | PHOS. BRONZE | GOLD/TIN PLATED | Ni:1~5u', TIN:3u' GOLD:1~3u' | 12 |
| 5 | FRONT SHIELD | BRASS | TIN PLATED | TIN:3~5u | 1 |
| 6 | BACK SHIELD | BRASS | TIN PLATED | TIN:3~5u | 1 |

PartNo.:MDJ-608E-6A-L

| APPRO | CHECK | DRAWN | PART NO. | Part No.:MDJ-608E-6A-L | | | DESCRIPTION | VIGORTEC |
|---|---|---|---|---|---|---|---|---|
| | | | ITEM NO. | | | | | |
| | | | DRAW NO. | | | | | |
| | | | UNIT | mm | SCALE | no | | |
| | | | TOLER | | NO. | | Tel: 0769 22020068 Fax: 0769 22020069 E-mail: sales@vigortec.com | |